Towards a technocritical mathematics education

UFFE THOMAS JANKVIST, MORTEN MISFELDT, EIRINI GERANIOU, MARIO SÁNCHEZ AGUILAR AND ANNA BACCAGLINI-FRANK

Taking its departure point in critical mathematics education, mathematical competencies, and the use of digital technologies in mathematics teaching and learning, the paper sets out to discuss and describe a technocritical mathematics education. Not least this is due to the increase of hidden mathematics in technology of society today, both inside and outside the classroom. It is argued that a technocritical mathematics education must enable students to exercise the processes of "packing" and "unpacking" (hidden) mathematics as part of becoming citizens in a modern society. The paper raises the questions of what mathematical cases might enable students to develop competence with regard to these processes, and what might characterise such mathematical cases. Part of the answer to this point is a so-called embedded "matryoshka doll" feature of such mathematical cases. Two examples of mathematics-based technologies – public-key cryptography and blockchains for cryptocurrency – on which our modern-day society are deeply dependant are displayed and discussed in the light of a technocritical mathematics education.

In a context of democracy and subject matter didactics, Misfeldt and Jankvist (2020) argue for a "technocritical mathematics education" which focuses on enabling students to "pack and unpack mathematics". In this regard, packing and unpacking concern both the use of digital technology in the classroom and are related to students' enquiring their own technological surroundings. It is well known that digital technologies in our everyday life hide a lot of mathematics. Almost twenty years ago, the now past applied mathematician and philosopher of mathematics Philip J. Davis said:

> It's a wonderful subject, mathematics, of course, and the interesting thing is that it is coming into our lives more and more. The age is

Uffe Thomas Jankvist, *Aarhus University*
Morten Misfeldt, *University of Copenhagen*
Eirini Geraniou, *University College London*
Mario Sánchez Aguilar, *Instituto Politécnico Nacional*
Anna Baccaglini-Frank, *University of Pisa*

Jankvist, U. T., Misfeldt, M., Geraniou, E., Aguilar, M. S. & Baccaglini-Frank, A. (2023). Towards a technocritical mathematics education. *Nordic Studies in Mathematics Education*, 28 (3-4), 9–34.

> the mathematical age. Most of the mathematics is hidden. It's invisible to people, because it's in programs, it's in chips, it's in laws ... So, you don't see it – and if you don't see it, you don't think it is there.
>
> (Philip J. Davis in Jankvist & Toldbod, 2005, p. 321)

The situation today appears to only have increased in respect to the hidden mathematics in society. Surprisingly, perhaps, this also goes for what is taking place inside the mathematics classroom (Misfeldt & Jankvist, 2020). With the heavy introduction of digital technologies (DT) – such as dynamic geometry environments (DGE) and computer algebra systems (CAS) – in both lower and upper secondary schools, quite a bit of mathematics is hidden for the students today. Mathematical procedures are packed away into CAS procedures such as "solve" for solving linear equations and "desolve" for solving practically any type of differential equation, and DGE procedures as "ruler" and "drag". Such procedures have been documented to have both unintended negative consequences for the students' mathematics learning due to blackboxing of mathematical processes and content (e.g. Buchberger, 1990, 2002; Jankvist et al., 2019) as well as new learning potentials such as a lever potential, which allows students to focus on conceptual mathematics without getting stuck in tedious calculations (e.g. Dreyfus, 1994; Heid et al., 2012). Even though these insights reveal different takes on the consequences of packing and unpacking mathematics for students' learning, none of them talk about the processes of packing and unpacking as goals in their own right. This is the purpose of *technocritical mathematics education* (Misfeldt & Jankvist, 2020), since this takes as its outset that the end goal of learning mathematics is citizenship and critical awareness, along with the fact that technology plays a large and growing role in shaping our society (Harari, 2016; Zuboff, 2019).

Technocritical mathematics education is of course based on *critical mathematics education* (Skovsmose, 2023), which is primarily concerned with societal inequality from a mathematics education point of view. Even though research in critical mathematics education does address the role of DT in democratic processes related to inequity, economics, etc., it does not focus on the cognitive function of DT when working with mathematics; its focus is on the role of hidden mathematics in DT concerning critical and democratic processes in society (e.g. Skovsmose & Yasukawa, 2004). The observation that DT hides mathematics both inside and outside of the mathematics classroom, i.e., in the wider society, calls for a new focus in mathematics education. As put forward by Misfeldt and Jankvist (2020), perhaps a newly organised mathematics education, where the teaching and learning focus is on the "translation processes"

that pack and unpack mathematics, respectively. That is, the transformations that hide and uncover mathematics in relation to the given situations and purposes. It thus becomes a democratic objective that students learn to distinguish between use of technology as lever potential and as black box, respectively. To be able to address complex problems from a holistic point of view, it is important to be able to simplify – or "hide" – single elements. Yet, from the point of view of citizenship in a democracy, it is important to be able to uncover the involved mathematics again, both in relation to mathematical concept formation and the use of mathematical models in society. To this end, DT in the form of mathematical software (DGE, CAS, etc.) plays a central role, since these tools train exactly this. Critical mathematics education has some similarities to mathematics that are related to "the real world" either by focusing on realistic contexts (Van den Heuvel-Panhuizen & Drijvers, 2020), mathematical modelling (e.g. Cevikbas et al., 2023; Geiger, 2017; Lesh & Doerr, 2003; Maas et al., 2022), or mathematics developed in practice (Nunes et al., 1993). However, the combination focusing on students' empowerment and on critical and reflective uses of mathematics, is distinct for critical mathematics education and makes this perspective rather relevant when considering how mathematics can and should contribute to students' mathematical literacy.

As pointed out by Davis in the introductory quote, if you cannot see the mathematics, you do not think it is there. For this reason, a technocritical mathematics education must begin with training the students in spotting situations and contexts involving hidden mathematics. More concretely, this means that the use of DT in mathematics teaching should include a direct focus on the processes of hiding mathematics and revealing already hidden mathematics. Still, it is clear that to exercise these processes, students must possess some mathematical capabilities and understanding – they must possess mathematical competencies. In this paper, we thus ask the following questions:

> What might be examples of mathematical cases that enable students to develop and engage with the processes of packing and unpacking hidden mathematics related to use of DT? And what characterises these cases from a technocritical mathematics education point of view?

As a means for addressing these questions, we provide two illustrative mathematical cases from our everyday surroundings: one related to public-key cryptography, which is used in much of our digital communication, online shopping, etc.; and one related to blockchain technology which is used in relation to cryptocurrency. But first there is a description

of the theoretical perspectives on which we build our argumentation. In particular, we draw on two strands of mathematics education research that both – each in their own way – augment the critical mathematics education approach.

Mathematics education theoretical perspectives

We use three bodies of literature to describe the problématique. Critical mathematics education, which as mentioned above, focuses on the role mathematics plays in developing critical thinking and democratic citizenship, and serves to develop an awareness about how mathematics education may contribute to inequality. Furthermore, we relate to the Danish mathematical competencies, the so-called KOM framework (Niss & Højgaard, 2019), which focuses on how the ability and willingness to do mathematics is an important outset for participating in industry and democracy. The last body of literature we draw upon concerns what technology, and the use thereof in teaching, does to students' conception of mathematics and their motivation for and ability to engage mathematically in society.

Critical mathematics education

Critical mathematics education can be described in terms of its "concerns" or issues of interest. One of its main concerns is to provide students with a mathematical education that allows them to identify, judge and criticise the uses – and misuses – of mathematics in their own societal settings. Under this perspective, it is intended that students use mathematics as a tool that enables them to analyse and criticise their own societal reality. Skovsmose and Nielsen (2014) affirm that the concerns of critical mathematics education cover the following issues:

(a) Citizenship identifies schooling as including the preparation of students to be an active part of political life.

(b) Mathematics may serve as a tool for identifying and analysing critical features of society, which may be global as well as having to do with the local environment of students.

(c) The students' interest emphasises that the main focus of education cannot be the transformation of (pure) knowledge; instead, educational practice must be understood in terms of acting persons.

(d) Culture and conflicts raise basic questions about discrimination. Does mathematics education reproduce inequalities which might

be established by factors outside education but, nevertheless, are reinforced by educational practice?

(e) Mathematics itself might be problematic because of the function of mathematics as part of modern technology, which no longer can be reviewed with optimism. Mathematics is not only a tool for critique but also an object of critique.

(f) Critical mathematics education concentrates on life in the classroom to the extent that the communication between teacher and students can reflect power relations.

(Skovsmose & Nielsen, 2014, p. 1257)

These six perspectives, when presented in totality, illustrate how critical mathematics education presents a coherent approach to mathematics education, which questions some of the naturalised understandings of what mathematics is and why it is taught. Issues (b) and (e) are of special interest to the discussion of the relation between mathematics and technology, because of the analytical apparatus that mathematics provides in understanding our technical surroundings (issue b), and because mathematics itself is part of technologies that have a questionable or problematic impact on our lives (issue e). Critical mathematics education has questioned and criticised the very idea of "modernity" conceived as an ideal of social progress based on the advancement of science and the development of technologies – in which mathematics has much to do – and where the objectivity and neutrality of science and technological advances are assumed and left unquestioned.

One scholar who has questioned this presumed neutrality of modernity and the role of mathematics in its constitution is D'Ambrosio (1994):

> In the last 100 years, we have seen enormous advances in our knowledge of nature and in the development of new technologies. [...] And yet, this same century has shown us a despicable human behaviour. Unprecedented means of mass destruction, of insecurity, new terrible diseases, unjustified famine, drug abuse, and moral decay are matched only by an irreversible destruction of the environment. Much of this paradox has to do with an absence of reflections and considerations of values in academics, particularly in the scientific disciplines, both in research and in education. Most of the means to achieve these wonders and also these horrors of science and technology have to do with advances in mathematics.
>
> (D'Ambrosio, 1994, p. 443)

It is in this context that the notion of *mathematics in action* (Skovsmose, 2004) becomes important. The notion refers to the identification of the role of mathematics in the technological planning of society and in decision-making. The notion also considers how mathematics becomes installed in society and starts operating as part of technological devices, although in a way that is not visible to everyone.

Indeed, as noted by Skovsmose (2020), "most often the mathematics that is brought into action is operating beneath the surface of the practice" (p. 605). An example used by Skovsmose (2020) to illustrate this, is the process of shopping at the supermarket. Particularly the moment in which the cashier scans the bar codes of the products to calculate the total of the purchase, and the shopper uses her credit card so that an electronic reader subtracts from her bank account the amount of money that covers the total of the purchase. Even though neither the shopper nor the cashier are required to do any arithmetic to perform this process, and although there is no mathematics in sight, there is a considerable amount of mathematics involved in the process.

> The items are coded and the codes are read mechanically; the codes are connected to a database containing the prices of all items; the prices are added up; the credit card is read; the amount is subtracted from the bank account associated to the credit card; security matters are observed; schemes for coding and decoding are taking place.
>
> (Skovsmose, 2020, p. 605)

There are two important things to consider here. First, that mathematics-based technology is found everywhere in modern societies: in banking transactions, in different forms of electronic communication, in economic planning, in insurance companies and risk calculations, in techniques for surveillance and control, in military devices, etc. Mathematics in action is an integral part of the socio-technological structures of modern society. Second, that mathematics in action can have different qualities – not necessarily positive ones. They can be "productive, risky, dangerous, benevolent, expensive, dubious, promising, and brutal" (p. 607). An example to illustrate this kind of undesirable qualities is the use of drones by the American military in the Afghanistan war.

> The operation of the drone includes a range of mathematics brought in action. The identification of a target includes complex algorithms for pattern recognition. The operation of a drone can only take place through the most sophisticated channels of communication, which in turn must be protected by advanced cryptography. Channels of communication as well as cryptography are completely mathematized.

> The decision of whether to fire or not is based on cost-benefit analyses: Which target has been identified? How significant is the target? What is the probability that the target has been identified correctly? What is the probability that other people might be killed? What is the price of the missile? Mathematics is operating in the middle of this military logic. (Skovsmose, 2020, p. 606)

As pointed out by Skovsmose (2020), mathematics in action often seems to act in an ethical vacuum that is determined by an "objective" authority attributed to mathematics. Moreover, he argues that this "objectivity" of mathematics is a myth that needs to be challenged. Overcoming such a myth is an educational challenge for mathematics education, since this should provide conditions for students to uncover, identify and critically reflect on any form of mathematics in action. We believe that it is in such contexts that the development of a *technocritical mathematics education* becomes necessary, where focus is on the (increasing) amount of mathematics in action that is encoded into digital technologies as well as practices building on such technologies.

Constructs related to the use of DT

Some three decades ago, Buchberger (1990) argued that before students should be allowed to use DT in a blackboxing manner, they must have studied the mathematical "area thoroughly, i.e., they should study problems, basic concepts, theorems, proofs, algorithms based on the theorems, examples, hand calculations" (p. 13). The work with the mathematical content is what Buchberger (1990; 2002) refers to as the "whiteboxing stage". The order of this whiteboxing stage before any blackboxing, he named the "whitebox/blackbox principle" for using DT, in his case CAS.

Three decades later much has happened to the use of DT in the mathematics classroom. Jankvist and Geraniou (2021) argue that Buchberger to some extent appears to have disregarded the potential of DT themselves serving a whiteboxing purpose in students' work with unfamiliar mathematical areas. This role was, however, acknowledged by Cedillo and Kieran (2003), in their introduction of the term "grayboxing" as well as by Drijvers (1995), who early on was critical of a too strict interpretation of Buchberger's principle. Grayboxing combines blackboxing and whiteboxing, acknowledging that mathematics learning may take place in an environment that combines the two. For example, in a context of algebra, Cedillo and Kieran (2003) point out that DT can serve as "a mediator of algebra learning – a tool that helps create simultaneous meaning for the objects and the transformations of algebra" (p. 221). Jankvist and Geraniou (2021) propose to "define whiteboxing, still as the opposite of

blackboxing, but to be when digital technology serves the purpose of revealing mathematical aspects otherwise hidden or inaccessible to the students" (p. 222).

Hence, the situation of DT in the mathematics classroom is not as black-white as one might expect at first sight. DT serve the purpose of packing down by blackboxing, but they may also play a role in concept formation and potentially unpacking hidden mathematics. This is to say that a balance must be struck between the role of DT as a lever potential (Dreyfus, 1994) and the fact that blackboxing in itself may leave students dependent on DT and with little experience of performing low-level mathematical processes (Nabb, 2010) as well as not being able to account for these (e.g. Jankvist & Misfeldt, 2015; Jankvist et al., 2019).

In recent years, the use of computers in mathematics education has also started to address the intersection between mathematics and computer science. This has mainly been done under the heading of working with *computational thinking* in the mathematical classroom (Kallia et al., 2021; Pérez, 2018; Tamborg et al., 2023; Weintrop et al., 2016; Wing, 2006). Computational thinking is seen as related to problem solving, algorithms, recursion and abstraction (Wing, 2006), as well as to data, modelling, programming and system thinking (Weintrop et al., 2016). The focus on computational thinking in the teaching and learning of mathematics suggests that these tools allow for new mathematical processes and meaning making that has some affinity to computer science (Pérez, 2018; Ye et al., 2023). This means that mathematics has an increased responsibility to address students' ability to understand their technological surroundings. However, it also means that the ability to understand data, algorithms and recursion will be increasingly available as learning objectives and capabilities in the mathematics classroom.

Despite the obvious differences, the use of DT in the mathematical classroom is a good starting point for investigating technologies in our surroundings. Some of the phenomena are similar. Mathematics is hidden or blackboxed in digital surroundings both in the classroom and outside the classroom. The way that teachers and students talk about blackboxing and whiteboxing as a strategy to learn with DT, does have a potential to transfer to discussions about how mathematics is hidden in our digital surroundings outside the classroom.

The KOM framework

As mentioned above, we draw on the KOM framework that considers the ability and willingness to do mathematics as an important outset for participating in industry and democracy, and that provides us with a language of mathematical mastery. This way we will be able to discuss

citizenship and democratic participation in work life in relation to the use of DT. Niss (2016) states that DT on the one hand may "enhance a wide variety of mathematical capacities", but on the other hand, also may "replace some mathematical competencies", which surely is not desirable, since DT can

> [...] replace students' creation of meaning and understanding of mathematical concepts and results; replace reasoning and sound and critical judgment; replace problem-solving competency; replace symbols and formalism competency, including the ability to perform basic computations; construct, interpret, or validate mathematical models; and replace the work needed to understand "what?," "how?," and "why?" in mathematics. (Niss, 2016, pp. 248–249)

The KOM framework is a theoretical approach that conceptualises the meaning of "being mathematically competent" (Niss & Højgaard, 2011; 2019). Within this theoretical framework the notions of "mathematical competence" and "competencies" as well as their possible roles in the teaching and learning of mathematics, are fundamental. The notion of *mathematical competence* is defined as:

> Someone's insightful readiness to act appropriately in response to all kinds of *mathematical* challenges pertaining to given situations. It is essential to stress that the "situations" referred to in this definition need not be mathematical in and of themselves, as long as they (may) generate mathematical challenges.
>
> (Niss & Højgaard, 2019, p. 12, emphasis in the original text)

As can be inferred from the definition above, the *situations* referred to may include intra- or extra-mathematical contexts. As noted by Niss and Højgaard (2019, p. 12), such situations

> Actually or potentially call for the activation of mathematics in order to answer questions, solve problems, understand phenomena, relationships or mechanisms, or to take a stance or make a decision, endeavours that give rise to the "challenges" we have in mind in the definition.

The mathematical competence in turn is constituted by a set of eight *mathematical competencies*. These are the mathematical competencies of: thinking; problem handling; modelling; reasoning; representation; symbols and formalism; communication; and aids and tools (for more elaborated descriptions, please refer to Niss and Højgaard, 2011, 2019). It is important to note that, although they are usually presented separately, these competencies may overlap – depending on the situation and context where they are activated. It is also important to note here that it

is not possible for an individual to possess a mathematical competency completely and exhaustively. That is to say, the framework assumes that the mathematical competencies of individuals are manifested in different contexts and situations but never in its full range. KOM offers three dimensions to characterise the degree of possession of a mathematical competency by an individual: *degree of coverage*, the extent to which the individual possesses all the aspects of the competency; *radius of action*, the range and variety of different contexts and situations in which the individual can successfully activate the competency; and *technical level*, the level and degree of sophistication of how the individual manages the mathematical concepts, results, theories and methods (Niss & Højgaard, 2019). The KOM framework addresses a paramount concern in mathematics education, namely, to change focus in education from facilitating students' learning of specific mathematical content towards teaching them a mathematical approach to life. The KOM framework allows a reification of mathematical processes that enables us to discuss these processes that we endorse in the teaching of mathematics across various specific classroom contexts, even though specific teaching situations can never be fully described by the eight mathematical competencies.

Two illustrative "mathematics in action" cases

In this section, we provide two illustrative mathematics in action cases from modern day society that rely on quite a bit of embedded, hidden, and packed mathematics.

Situating the cases

Before we dwell into the mathematical details of the two mathematics in action cases, it makes sense to describe the technological and social situations that exist around these. As mentioned in the introduction, the first case is that of public-key cryptography, which dates back to the 1970s and today is the basis for much of our online communication. The second case is that of blockchains, which is the technology behind cryptocurrency that was invented approximately 15 years ago and now is a major player on the financial market.

These cases are chosen because they both exemplify a type of mathematics that has become important for public political discussions over the last decades as a response to the increased digitalisation. Cryptography and privacy are important themes when discussing the relation between state and citizen. Encrypted web browsing and text message services are, on the one hand, a guarantee for individual privacy, and on the other hand, a guard against criminals who could otherwise steal one's bank

information when shopping online, or spy on people when texting their secret friends over services such as WhatsApp and Signal. Also citizens of autocratic regimes, and anyone with perhaps legitimate interests and information needs that are criminalised in the country that they live in, benefit from encryption.

Nevertheless, some services are also becoming a haven for criminals. The value of private communication for criminals is of course not surprising. Currently it could seem that various solutions for encrypted messaging is a major battle ground between criminals and international police intelligence service as seen in the recent ANØM case (ANOM, 2023), where American and Australian intelligence services took over the control of an encrypted service used by criminals and kept running it while building cases against its users, leading to hundreds of arrests. Surely, this shows that criminals in general benefit a great deal from such services. All this is to say that the control over encryption raises several questions about the relation between state and citizens. To what extent does it make sense to ban encryption? And how can this be done in an international technology landscape? What is the balance between freedom and the control of crime? All these questions are political, yet they build on genuine techno-mathematical inventions.

Blockchain and the derived cryptocurrencies are a large financial entity, even though the total value of cryptocurrencies is still less than one percentage of the entire world's money. The idea in cryptocurrencies is a peer-to-peer means of value transportation that is not regulated by any state, and hence sets its owner free from governmental control. Many people argue that cryptocurrencies have similarities to Ponzi schemes and hence possess a danger to the entire economy. In addition, the carbon footprint, and the occupation of computational resources for mining and maintaining cryptocurrencies are not trivial (Buiter, 2022). Surely, bitcoins and other cryptocurrencies are also often used by criminals. For all these reasons, there is an ongoing debate whether cryptocurrencies should be regulated or not, and if so, then how this could be done.

Public-key cryptography

Today, most cryptosystems draw on the idea of a so-called "one-way function". That is an injective function, f, which for every x in its domain is easy to calculate $f(\mathrm{x})$, but for every $y = f(\mathrm{x})$ in its range for all practical purposes impossible to calculate $f^{-1}(y) = x$. The phrase "for all practical purposes" is of course not a well-defined mathematical term. Nevertheless, the idea is that it may take moments to calculate $f(\mathrm{x})$, while it may take eons to calculate $f^{-1}(y)$.

The idea of public-key cryptography is that a person, Bob he is usually called, by means of such a one-way function generates a public encryption key, one to which only he knows the decryption key, i.e., the inverse function. Another person, who is usually named Alice, interested in sending a secret message to Bob can then use his public key to encrypt a message and send it. Bob is then the only one capable of decrypting this message. Due to the nature of the one-way function, a cryptanalyst, Eve, eavesdropping on the line will not stand a chance of breaking the code, even though she knows both the encrypted message, dependent on *f*, and the public key. The situation is illustrated in figure 1. Different mathematical fields offer different examples of such one-way functions, e.g. projective geometry and number theory. The latter is the most well-known and is oftentimes ascribed to Ron Rivest, Adi Shamir and Leonard Adleman (Rivest et al., 1978), and thus named RSA. RSA builds on the problem of prime factoring large numbers.

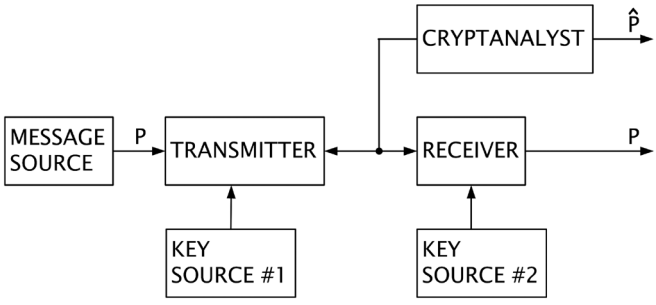

Figure 1. *Public-key cryptography as originally described by Diffie and Hellman (1976). One public key (#1) is used to encrypt the message P before transmission. Another private key (#2) is used to decrypt after reception*

Generating a very large number n, for example 400 digits long, by means of multiplying two, also, large primes p and q is a straightforward operation. However, going the opposite way, that is prime factoring n, is "for all practical purposes" impossible. In RSA, the public encryption key consists of two numbers; n, the product of two large (secret) primes p and q, and a number e which is determined in such a way that $\gcd(e, (p-1)(q-1)) = 1$, gcd being the greatest common divisor. The encryption procedure on the message M, a natural number, revealing the cipher text C is defined as $C \equiv M^e \pmod{n}$, meaning that the integer C is *congruent* to the integer M^e modulo the integer n. This means that n divides $(C - M^e)$ with remainder 0, i.e. $n \mid (C - M^e)$. The private decryption key, besides also consisting of n, consists of a number d, which is an inverse of e modulo

$(p-1)(q-1)$, that is to say $ed \equiv 1 \pmod{(p-1)(q-1)}$ (d can be calculated using the Euclidean algorithm and Bezout's identity). The decrypting procedure is defined as $C^d \equiv M \pmod{n}$.

From a mathematics point of view, we of course need to prove that the decryption procedure of RSA actually leads to the original message M. Rivest et al. (1978) did this using well established results from number theory. To be exact, the proof builds on Euler's theorem, the special case of this known as Fermat's little theorem, as well as the so-called Chinese remainder theorem. We do not provide the proof here. Still, diving into these theorems illustrates yet another mathematical layer of the case.

Cryptography is of course a good way to ensure privacy, but as mentioned above there are a number of political concerns around this technology, e.g. criminal activities, surveillance and espionage. From a critical mathematics education perspective, we argued earlier that we should (or even have to) provide students with the necessary mathematical (and quite arguably *life*) skills that enable them to identify, judge and criticise the uses – and misuses – of mathematics in their own societal settings. So, equipping our students with knowledge and understanding of public-key cryptography should better prepare them for the challenges brought forward by the current state and policies around online communications. How private are their own personal communications? How does society respect (or not) every citizen's privacy? We are sure that students nowadays are brought up in a digitalised world, and some do not necessarily reflect on what "hidden" mathematics exist in the ways we communicate online, or even they simply do not care. Of course, we are not saying that all students need to care about every single detail and become experts in number theory and public-key cryptography. However, being exposed to the mathematical ideas behind secure online communications and "activating" mathematical thinking to understand the phenomena and mechanisms involved in public-key cryptography should foster students' development of a mathematical way of thinking about the world that surrounds them and lead to mathematical competence necessary for their future societal life. From a digital technologies' perspective, modelling the "problem" diagrammatically or with the help of digital technology (e.g. a simulation) would most certainly unveil some of the "mechanisms" of public-key cryptography and help students unpack the hidden mathematics (see the next section as well). But one could ask: Is knowing how something works, but also "seeing" how something works with the help of technology necessary in mathematics education? The answer could be: It depends. Do we want to create problem-solvers, reflective and logical thinkers or do we want to develop efficient users of technology who are reliant solely on technology and its "magic" in solving problems for them?

Both "types of citizens" can survive in a digitalised society. But what is key here is what the latter "type of citizen" is equipped to do (or not) when technology breaks.

Blockchain

The "one-way function" described in the previous section can also be used to create *hash functions*, which are digital identifiers for any dataset, mapping data to simple strings in an injective manner. In this case, no private key exists that allows us to calculate the inverse. A hash function can be used to guarantee that no one has messed with your data.

As an example, say that you calculate the hash function of a word document, e.g. testament.doc, where you testament all your AC/DC t-shirts to your brother, write the hash down and place it in a secure place (it could be h(testament.doc) = 4353tfew4), and then keep the document on the family computer hard drive. If your sister now tampers with the document, so that she gets the t-shirt from the "Highway to Hell" tour, the hash would be different, and the scam can be revealed.

This use of one-way/hash functions has several applications. One of them is that they make blockchains possible. A blockchain is an open and connected database of information that can be read by everyone, but not copied or altered. The idea is to store data in a series (chain) of code-blocks. Each block contains the data to be stored in the specific block and a little more information to make the chain secure. This extra information consists in that each block is given a hash label (the result of calculating the hash function of the block), and this hash-label is stored in the block together with the hash-label of the previous block in the chain (figure 2).

Blockchains have several applications, cryptocurrency being one of them and smart contracts another. With blockchains, we can be sure about ownership and transactions of currency without keeping track of who owns what in a central governmental database. If the currency is spent once, the chain will be altered, and it cannot be spent again.

Figure 2. *A connected chain of data blocks containing information about testimonial information, if one block is tampered, the hash function is changed, and the chain is broken.*

There is a heavy critique and debate about the use of blockchains for cryptocurrency. As mentioned above, it has been argued that these currencies mainly act as Ponzi schemes and consume an enormous amount of energy while not adding anything good to human life.

Similarly to what was argued with regards to a critical mathematics education perspective for the public-key cryptography case, it seems reasonable to argue that a sound understanding of blockchain is an important element in participating in political discussions about regulations and taxations of such monetary instruments. Debates over cryptocurrency often build on arguments where mathematics lends objectivity and security to the financial constructions in a way similar to what Skovsmose and Nielsen (2014) describe as: "Mathematics is not only a tool for critique but also an object of critique" (p. 1257). This because the mathematical and precise nature of the blockchain does not guarantee a financial stable asset.

Packing and unpacking – the "Matryoshka doll" metaphor

In both mathematics in action cases above, a full understanding of the mathematical situation requires quite a bit of technical work and a high level of abstraction on behalf of the students. In a sense this makes these two cases hard to include in actual mathematics school teaching. Nevertheless, both cases point to mathematical artifacts that are important to learn about in order to promote democratic citizenship. Furthermore, if these artifacts should be taught in relation to a school topic, it seems relevant to teach them within our mathematics programmes. Yet, this leaves the question of how to do this without just talking "about" the cases, but providing the students with hands-on experiences with the involved mathematics, i.e. one-way functions, number theory, etc. The two cases have of course been chosen in such a way that they allow for packing and unpacking of the mathematics involved.

Now, surely our education systems should equip students with the necessary skills to enter nowadays society, where digital technology makes frequent appearances in everyday life. Such skills include digital competencies, as well as mathematical competencies. To ensure that our students are critical thinkers and can understand the mathematics behind certain processes and activities that involve technology – or not – we may need to rethink the current mathematics curriculum (Pepin et al., 2023) to ensure that students have the necessary mathematical knowledge, but also the competencies needed, involving abstracting, reasoning, etc., as well as using tools to effectively reach a solution (to mention a few from the KOM framework).

Going back to the public-key cryptography case, we could break down the mathematics that needs to be taught to students at different levels as follows. The very idea of public-key cryptography can be explained to students at a rather elementary level, e.g. by comparing with the idea of private-key cryptography and the potential risks of such. This will of course need to involve a discussion of the idea of a mathematical "one-way function", to the extent that this is possible. Moving to lower secondary mathematics education, where the concept of function is known to the students, a deeper discussion of function and its inverse can be carried out. Also, actual number examples can be introduced, and the students can carry out their own calculations involving the numbers p, q, and e, as described in the case above. Surely, this will entail an introduction to the modulo operation and congruence (and the congruence sign), with which they may not be familiar. However, the notion of a greatest common divisor (gcd) as well as exponent and powers should not be altogether unfamiliar to the students. Of course, the Euclidean algorithm and Bezout's identity could be "packed" away through an outsourcing to DT. At upper secondary level, a full unpacking with proof of the correctness of RSA, involving actual number theoretic results such as Euler's theorem, the Chinese remainder theorem, etc. can be implemented. (For an example of such an implementation in upper secondary school, please refer to Jankvist, 2011).

Having laid out all of the above, we do not propose that students need to be taught cryptography *per se* at school, but instead we simply propose that we should try to equip students with the competence to identify the "hidden" mathematics in various aspects of our lives and scientific disciplines, such as cryptography. Students should become critical thinkers as to how, when and for what purpose technology and mathematics may be used outside school. Of course, making some links to the mathematics that support a discipline such as cryptography, and mentioning those links at a high level, including blockchain and cryptocurrency, could encourage students to look for the "hidden" mathematics in various other disciplines too. In other words, we envisage that providing students with "advanced" and real examples and presenting these as a necessary "tool" for secure digital communications, transactions, data protection, etc. would instil the need for looking further into the mathematics that may be hidden as a way to understand the world around them.

As for blockchains, connecting information in an open chain, where the hash function ensures that information cannot be changed, is an example of using computational thinking to pack and unpack information. Students in lower secondary school can easily learn about the value of non-editable and chained information by looking at examples such as

databases and cryptocurrency. Furthermore, by adding a little bit of programming and algorithmic thinking, it is possible to create or modify a simple blockchain, and if the students are up to it, it can be fun to create simple hash functions. Such hash functions can be rather elementary, e.g. basic words or character counts, or more advanced, e.g. hash functions that avoid or minimise unfortunate collisions (where two different documents lead to the same hash, making the blockchain insecure).

How "deep" students' mathematical knowledge is and how competent they may become in applying their knowledge outside school mathematics is a challenge for all educators. What activities we decide to include as part of their school education that help them in accessing the "hidden" mathematics, "seeing" and understanding its different layers (according to the matryoshka doll metaphor) of mathematical knowledge is vital. We surely want to support our future citizens in developing a technocritical mathematical discourse that will enable them to be active, critical, techno-mathematical literate members of their society.

Both cases of public-key cryptography and blockchains share the feature that they can be packed and unpacked according to the educational level and context. A teacher can decide how many layers to peel off. We can think of the two mathematics in action cases as possessing a "matryoshka doll" feature, where one can choose to focus only on the outer doll, the second outer, etc., or to simply go all the way. One can unpack or pack, depending on the educational needs at hand, while still illustrating to the students that (and how) mathematics is embedded in these technologies. Of course, we can also argue that such competence is necessary for students to have in the digital age, and therefore a teacher should consider how best to "train" her students. This could be viewed as a long-term "project work", to be carried out perhaps even over several years (in educational contexts in which this is possible, like in the Italian educational system), where the teacher plans accordingly and reveals the different "matryoshka dolls" gradually to her students, considering when and whether students are ready as well as the best pedagogical approaches to do so.

Towards a technocritical mathematics education

From the perspective of critical mathematics education, the matryoshka doll metaphor can be used to highlight a few central aspects of the relation between technology in our society and the teaching and learning of mathematics education. When preparing students to become active citizens and participate in political life, the ability to pack and unpack mathematics can be crucially important. Opaque technologies can be unpacked with mathematical knowledge and approaches (as shown in

the two cases above). Participation in debates about laws and regulations around such technologies requires that one can parcel the concerns in play with the appropriate mathematical depths and the right concerns "packed down" inside the doll. Also, "matryoshka dolls" are a way to look at the world around you as consisting of interesting things that can be opened with mathematics. In a sense, this is not unlike taking a modelling perspective on the world and activating the analytic part of KOM's modelling competency to critically analyse and evaluate existing or proposed models. Still, this is critical if we want students' interest and ability to act in the centre of the educational enterprise, and if we want them to reflect upon inequalities and misconducts that often exist in a modern, highly technological society, and often are hidden away or encoded in technology. In a sense, we want students not only to use mathematics as a "tool for critique, but also an object of critique" (Skovsmose & Nielsen, 2014, p. 1257), as this enables them to understand and appreciate those possible inequalities and misconducts in our society.

The mathematical competencies that are needed when opening and closing the matryoshka dolls change. At each level of the doll, specific mathematical competencies are needed. Yet, the deeper we penetrate the doll, the more is demanded of our possession of the specific mathematical competencies in play. This is where the KOM framework's description of a person's possession of a competency's three dimensions: the degree of coverage, the radius of action, and the technical level (Niss & Højgaard, 2019) as mentioned earlier, may become relevant, and support in identifying the degree of possession of a mathematical competency by an individual.

Blackboxing and whiteboxing are of course related to opening or closing the matryoshka doll. The literature on these topics (e.g. Buchberger, 1990; Jankvist et al., 2019; Jankvist & Misfeldt, 2021) points to potential problems that can occur when elements are blackboxed. Nevertheless, the matryoshka doll approach turns this around, and shows that the ability to blackbox and whitebox (in the sense described in Jankvist & Geraniou, 2021) mathematical complexity is as much an independent competence as it is a problem for mathematics learning. This is to say that in a sense the matryoshka doll is a prescriptive – or a normative version – of the blackboxing and whiteboxing processes, which traditionally have been used to describe learning processes with technology. The new thing here, however, is that the ability to do the packing and unpacking is a goal in itself of mathematics teaching.

Teachers are expected, to some extent required, to support students in this process of "unpacking" the mathematics behind tasks, such as the mathematics in action cases presented earlier. Of course, this process is

not a straightforward one neither for students nor teachers, the latter who are meant to possess the necessary competencies for using pedagogically powerful technology-enhanced approaches to teaching mathematics. It is a process that needs time and commitment to appreciate how to systematically address this student competence. Hoyles et al. (2010) research on how to improve mathematics at work and how techno-mathematical literacies (TmL) can be integrated within working practices revealed the need for

> [...] employers to come to terms with the need for this new mathematical understanding [this here is the mathematics expressed and the ways in which math is communicated in particular workplaces] and to develop new pedagogical approaches for training, so as to make TmL more visible and available for exploration and development. (Hoyles et al., 2010, p. 168)

Similarly, we argue for the mathematics that is used in certain tasks but hidden to the "untrained" eye of a student, to become "more visible and available for exploration and development" with the help of the teacher (or a teacher educator); all these of course aimed at "training" students in becoming "active" and mathematically literate citizens. All in all, this is of course a rather challenging "project", involving careful thinking about design of activities, the resources, and pedagogical approaches to be used. This careful thinking brings us back to the concerns of critical mathematics education – particularly (c) – because it suggests that the primary aim of education should not merely be the transfer of knowledge in its pure form. Instead, education must be viewed through the lens of students as active participants, where educational practices are defined by their actions and interactions, and students are led to become more and more aware of both the content they are learning and of their learning processes. In other words, we want to identify ways in which to showcase to students how mathematics is a tool "for identifying and analysing critical features of society, which may be global" (Skovsmose & Nielsen, 2014, p. 1257), but at the same time are very relevant to the local environment of students. We therefore call for further research into technocritical mathematics education that can address these very issues. Based on our experience, for such a research field to embark and become sustainable, teachers should be strong believers in the value of technocritical mathematics education and actively engage in developing resources and transforming learning opportunities for their students, instead of being "receivers" of advice and guidance. Resources should be revisited on a regular basis to be refined and aligned with the evolution of techno-mathematical knowledge and technological advances.

On-going collaborative work between mathematicians, mathematics educators and researchers, in-service teachers from different disciplines (e.g. mathematics, science, computer science) should be promoted and empowered. Such work aligns with Skovsmose's (2004) idea of "mathematics in action". Recognising that the role mathematics can play in the technological planning of society and in decision-making is paramount in educating "technocritical" and "techno-mathematical" citizens.

Conclusions

Returning to the outset of the paper, we asked what might be examples of mathematical cases that can enable students to develop and engage with the processes of packing and unpacking hidden mathematics related to use of DT, and what might characterise such cases from a technocritical mathematics education point of view. We have provided examples of two such cases, public-key cryptography exemplified by RSA, and blockchains. Using Skovsmose (2004), we have characterised these cases as *mathematics in action cases*. Both cases display and discuss the "matryoshka doll" feature, i.e. that they can be packed and unpacked according to the mathematical level of students and mathematics programmes in question. A particular focus for developing students' competence in performing the processes of packing and unpacking would at least involve fostering the following elements as part of students' technocritical mathematics education.

- Awareness of critical mathematics education's focus on mathematics in action, in particular that mathematics comes to serve as a tool for identifying and analysing critical features of technology use in society for students.
- Awareness of both intentional and unintentional blackboxing of mathematics in technology, and experience of how to engage in a process of whiteboxing the mathematics when needed.
- Awareness of a wide range of mathematics in action cases that to some extent possess the "matryoshka doll" feature for students to exercise and develop their competence of packing and unpacking.
- Acquiring the needed level of mathematical competencies to engage in the above-mentioned elements of technocritical mathematics education.

Finally, we must mention that technocritical mathematics education is thus *not* a question of adapting mathematics teaching to a use of digital

technologies because these constitute new learning paths. Nor is it about the fact that it is an end in itself that students become good at using the technologies. The key "problématique in play" is to develop the students' critical competences in relation to their digital surroundings, and especially their ability to activate their mathematical competencies and content knowledge to this end. However, we are not only suggesting developing the students' ability to criticise modern technology. Technocritical mathematics education is just as much a restructuring, driven by a positive and goal-oriented argument, about uncovering the hidden mathematics in technologies that govern our society in order to support democracy and empower students to actively participate in identifying and reflecting upon the potentially "hidden" mathematics. This can assist students to activate their mathematical knowledge and competencies to strengthen their technocritical thinking and their democratic participation in a modern technology-enriched society.

Acknowledgements

This paper is written in the context of grant 8018-00062B under Independent Research Fund Denmark and in the context of the grant NNF19OC0058651 under Novo Nordisk Foundation.

References

ANOM. (2023, October 5). In Wikipedia. https://en.wikipedia.org/wiki/ANOM

Buchberger, B. (1990). Should students learn integration rules? *ACM SIGSAM Bulletin*, 24 (1), 10–17. doi: 10.1145/382276.1095228

Buchberger, B. (2002). Computer algebra: the end of mathematics? *ACM SIGSAM Bulletin*, 36 (1), 3–9. doi:. 10.1145/565145.565147

Buiter, W. H. (2022, February, 8). O*utlaw cryptocurrencies now. Project Syndicate*. https://www.project-syndicate.org/commentary/outlaw-cryptocurrencies-now-by-willem-h-buiter-2022-02

Cedillo, T. & Kieran, C. (2003). Initiating students into algebra with symbol-manipulating calculators. In J. T. Fey, A. Cuoco, C. Kieran, L. McMullin & R. M. Zbiek (Eds.), C*omputer algebra systems in secondary school mathematics education* (pp. 219–239). NCTM.

Cevikbas, M., Greefrath, G. & Siller, H.-S. (2023). Advantages and challenges of using digital technologies in mathematical modelling education – a descriptive systematic literature review. *Frontiers in Education*, 8, Article 1142556. doi: 10.3389/feduc.2023.1142556

D'Ambrosio, U. (1994). Cultural framing of mathematics teaching and learning. In R. Biehler, R. W. Scholz, R. Strässer & B. Winkelmann (Eds.), *Didactics of mathematics as a scientific discipline* (pp. 443–455). Kluwer.

Diffie, W. & Hellman, M. E. (1976). New directions in cryptography. *IEEE Transactions on Information Theory*, 22 (6), 644–654. doi: 10.1109/TIT.1976.1055638

Dreyfus, T. (1994) The role of cognitive tools in mathematics education. In R. Biehler, R. W. Scholz, R. Strässer & B. Winkelmann (Eds.), *Didactics of mathematics as a scientific discipline* (pp. 201–211). Kluwer.

Drijvers, P. (1995). White-box/black-box revisited. *The International Derive Journal*, 2 (1), 3–14.

Geiger, V. (2017). Designing for mathematical applications and modelling tasks in technology rich environments. In A. Leung & A. Baccaglini-Frank (Eds), *Digital technologies in designing mathematics education tasks* (pp. 285–301). Springer. doi: 10.1007/978-3-319-43423-0_14

Harari, Y. N. (2016). *Homo deus: a brief history of tomorrow*. Random House.

Heid, M. K., Thomas, M. O. J. & Zbiek, R. M. (2012). How might computer algebra systems change the role of algebra in the school curriculum?. In M. A. (Ken) Clements, A. J. Bishop, C. Keitel, J. Kilpatrick & F. K. S Leung (Eds.), *Third international handbook of mathematics education* (pp. 597–641). Springer. doi: 10.1007/978-1-4614-4684-2_20

Hoyles, C., Noss, R., Kent, P. & Bakker, A. (2010). *Improving mathematics at work: the need for techno-mathematical literacies*. Routledge.

Jankvist, U. T. (2011). Anchoring students' meta-perspective discussions of history in mathematics. *Journal of Research in Mathematics Education*, 42 (4), 346–385. doi: 10.5951/jresematheduc.42.4.0346

Jankvist, U. T. & Geraniou, E. (2021). "Whiteboxing" the content of a formal mathematical text in a dynamic geometry environment. *Digital Experiences in Mathematics Education*, 7 (2), 222–246. doi: 10.1007/s40751-021-00088-6

Jankvist, U. T. & Misfeldt, M. (2015). CAS-induced difficulties in learning mathematics? *For the Learning of Mathematics*, 35 (1), 15–20.

Jankvist, U. T. & Misfeldt, M. (2021). Old frameworks – new technologies. *Canadian Journal of Science, Mathematics, and Technology Education*, 21 (1), 441–455. doi: 10.1007/s42330-021-00164-4

Jankvist, U. T., Misfeldt, M. & Aguilar, M. S. (2019). What happens when CAS-procedures are objectified? – the case of "solve" and "desolve". *Educational Studies in Mathematics*, 101 (1), 67–81. doi: 10.1007/s10649-019-09888-5

Jankvist, U. T. & Toldbod, B. (2005). Matematikken bag Mars-missionen: en empirisk undersøgelse af matematikken i MER med fokus på kildekodning og kanalkodning [The mathematics behind the Mars mission: An empirical study of mathematics in MER focusing on source coding and channel coding]. *Tekster fra IMFUFA*, 449. Roskilde University. http://thiele.ruc.dk/imfufatekster/pdf/449.pdf

Kallia, M., Borkulo, S. P. van, Drijvers, P., Barendsen, E. & Tolboom, J. (2021) Characterising computational thinking in mathematics education: a literature-informed Delphi study. *Research in Mathematics Education*, 23 (2), 159–187. doi: 10.1080/14794802.2020.1852104

Lesh, R. & Doerr, H. M. (2003). Foundations of a models and modeling perspective on mathematics teaching, learning and problem solving. In R. Lesh & H. M. Doerr (Eds.), *Beyond constructivism: models and modeling perspectives on mathematics problem solving, learning, and teaching* (pp. 3–34). Lawrence Erlbaum.

Maass, K., Artigue, M., Burkhardt, H., Doorman, M., English, L. D. et al. (2022). Mathematical modelling – a key to citizenship education. In N. Buchholtz, B. Schwarz & K. Vorhölter (Eds.), *Initiationen mathematikdidaktischer Forschung. Festschrift zum 70. Geburtstag von Gabriele Kaiser*. Springer. doi: 10.1007/978-3-658-36766-4_2

Misfeldt, M. & Jankvist, U. T. (2020). Teknokritisk matematikundervisning: at åbne den skjulte matematik i demokratiets tjeneste [Technocritical mathematics education: unpacking the hidden mathematics in the service of democracy]. In C. Hass & C. Matthiesen (Eds.), *Fagdidaktik og demokrati* (pp. 331–348). Samfundslitteratur.

Nabb, K. A. (2010). CAS as a restructuring tool in mathematics education. In P. Bogacki (Ed.), *Electronic Proceedings of ICTCM 22* (pp. 247–259). http://archives.math.utk.edu/ICTCM/VOL22/R007/paper.pdf

Niss, M. (2016). Mathematics standards and curricula under the influence of digital affordances: different notions, meanings, and roles in different parts of the world. In M. Bates & Z. Usiskin (Eds.), *Digital curricula in school mathematics* (pp. 239–250). Information Age.

Niss, M. & Højgaard, T. (2011). *Competencies and mathematical learning. Ideas and inspiration for the development of mathematics teaching and learning in Denmark*. IMFUFA. http://milne.ruc.dk/imfufatekster/pdf/485web_b.pdf

Niss, M. & Højgaard, T. (2019). Mathematical competencies revisited. *Educational Studies in Mathematics*, 102 (1), 9–28. doi: 10.1007/s10649-019-09903-9

Nunes, T., Carraher, T. N., Schliemann, A. D. & Carraher, D. W. (1993). *Street mathematics and school mathematics*. Cambridge University Press.

Pepin, B., Gueudet, G. & Choppin, J. (Eds.). (2023). *Handbook of digital resources in mathematics education*. Springer. doi: 10.1007/978-3-030-95060-6

Pérez, A. (2018). A framework for computational thinking dispositions in mathematics education. *Journal for Research in Mathematics Education*, 49 (4), 424–461. doi: 10.5951/jresematheduc.49.4.0424

Rivest, R. L., Shamir, A. & Adleman, L. (1978). A method for obtaining digital signatures and public-key cryptosystems. *Communications of the ACM*, 21 (2), 120–126. doi: 10.1145/359340.359342

Skovsmose, O. (2004). Mathematics in action. *Philosophy of Mathematics Education Journal*, 18. https://socialsciences.exeter.ac.uk/education/research/centres/stem/publications/pmej/pome18/skovsmose_math_in_action_pme.htm

Skovsmose, O. (2020). Mathematization as social process. In S. Lerman (Ed.), *Encyclopedia of mathematics education* (2nd ed., pp. 605–608). Springer. doi: 10.1007/978-3-030-15789-0_112

Skovsmose, O. (2023). *Critical mathematics education*. Springer. doi: 10.1007/978-3-031-26242-5

Skovsmose, O. & Nielsen, L. (2014). Critical mathematics education. In A. J. Bishop, K. Clements, C. Keitel, J. Kilpatrick & C. Laborde (Eds.), *International handbook of mathematics education* (pp. 1257–1288). Springer. doi: 10.1007/978-94-009-1465-0_36

Skovsmose, O. & Yasukawa, K. (2004). Formatting power of "mathematics in a package": a challenge for social theorising? *Philosophy of Mathematics Education Journal*, 18. https://education.exeter.ac.uk/research/centres/stem/publications/pmej/pome18/Skovsmose_formatting_power_of_mathematics.htm

Tamborg, A. L., Elicer, R., Bråting, K., Geraniou, E., Jankvist, U. T. & Misfeldt, M. (2023). The politics of computational thinking and programming in mathematics education: comparing curricula and resources in England, Sweden, and Denmark. In B. Pepin, G. Gueudet & J. Choppin (Eds.), *Handbook of digital resources in mathematics education* (pp. 1–27). Springer. doi: 10.1007/978-3-030-95060-6_55-1

Van den Heuvel-Panhuizen, M. & Drijvers, P. (2020). Realistic mathematics education. In S. Lerman (Ed.), *Encyclopedia of mathematics education* (2nd ed., pp. 713–717). Springer. doi: 10.1007/978-3-030-15789-0_170

Weintrop, D., Beheshti, E., Horn, M., Orton, K., Jona, K. et al. (2016). Defining computational thinking for mathematics and science classrooms. *Journal of Science Education and Technology*, 25 (1), 127–147. doi: 10.1007/s10956-015-9581-5

Wing, J. M. (2006). Computational thinking. *Communications of the ACM*, 49 (3), 33–35. doi: 10.1145/1118178.1118215

Ye, H., Liang, B., Ng, O-L. & Chai, C. S. (2023). Integration of computational thinking in K-12 mathematics education: a systematic review on CT-based mathematics instruction and student learning. *International Journal of STEM Education*, 10, Article 3. doi: 10.1186/s40594-023-00396-w

Zuboff, S. (2019). *The age of surveillance capitalism: the fight for a human future at the new frontier of power*. PublicAffairs.

Uffe Thomas Jankvist

Uffe Thomas Jankvist is Professor in Mathematics Education at the Danish School of Education, Aarhus University. His research interests encompass the use of history of mathematics in mathematics education, the role of digital technologies, mathematical competencies, upper secondary students' mathematics specific learning difficulties and "maths counselling". More recently, he has focused his efforts on developing implementation research as a field in mathematics education research.

utj@edu.au.dk

Morten Misfeldt

Morten Misfeldt is Professor and leader of the Center for Digital Education, Department of Science Education and Department of Computer Science, University of Copenhagen. His research is placed on the intersection between digitalization of teaching and learning and mathematics education. Most recently he has been focusing on the interplay between mathematics, programming, and computational thinking.

misfeldt@ind.ku.dk

Eirini Geraniou

Eirini Geraniou is an Associate Professor in Mathematics Education at the IOE, UCL's Faculty of Education and Society, University College London. Her research interests involve the use of digital technologies in teaching and learning of mathematics, iterative design-based research in creating digital resources and most recently mathematical digital competencies of students and teachers. She has extensive experience in mathematics education research and in particular qualitative research methods.

e.geraniou@ucl.ac.uk

Mario Sánchez Aguilar

Mario Sánchez Aguilar is Associate Professor of Mathematics Education at the Instituto Politécnico Nacional of Mexico. His research interests include the socio-political aspects of mathematics education. He serves as associate editor of the research journals "Implementation and Replication Studies in Mathematics Education" and "Educación Matemática".

mosanchez@ipn.mx

Anna Baccaglini-Frank

Anna Baccaglini-Frank is Associate Professor at the Department of Mathematics of the University of Pisa in Italy, and scientific director, with Pietro Di Martino, of the Center for Advanced Research on Mathematics Education (CARME). Her research focuses on students' mathematics learning processes as they engage in digital-technology-enhanced activities, and on the design of such activities, especially in a perspective of inclusion.

anna.baccaglinifrank@unipi.it